International Journal of Advanced Technology and Innovative Research

ISSN 2348–2370
Vol.07,Issue.08,
July-2015,
Pages:1319-1325

www.ijatir.org

Multiple Banking System Accessing with Embedded Smart Card ATM by using ARM7 Based RFID & GSM Technology

G. MANOHAR BABU[1], R. ANIL KUMAR[2]

[1]PG Scholar, Dept of Embedded Systems, Jyothishmathi College of Engineering and Technology, TS, India.
[2]Assistant Professor, Dept of ECE, Jyothishmathi College of Engineering and Technology, TS, India.

Abstract: The main objective of this project is to develop an embedded system based single smart card ATM (Automated Teller Machine) for multiple bank accounts. At present every customer has an individual ATM card for each and every bank in which they maintain an account. Hence handling the ATM cards with confidentiality of their passwords play a major role here to overcome this problem, embedding all their bank accounts of the users in a single ATM smart card in such a way that, the users can swipe the card and can select the bank from which they are interested to do transactions. Hence, a combination of multiple security compliments is mandatory to provide a high level of protection against fraud and other threats. The single smart card ATM, which is used for security applications for withdrawing cash from ATM machines .In this security system the specific persons can only enter by using this embedded system smart card, we can give access to the authorized people through the smart card (RFID) and GSM Module based OTP (One Time Password) and keypads. The embedded system is going to be developed based on ARM7(LPC 2148) microcontroller, whenever the person puts his smartcard on the reader the system will detect the authorized persons then it asks for pin and sends the message to the person with his registered mobile number using GSM technology. The GSM module interfaced to the ARM7 microcontroller and the pin is entered by using keypad.

Keywords: ARM7, GSM, OTP, LPC, RFID.

I. INTRODUCTION

In this project we are trying to reduce disadvantages of existing banking ATM (Automatic Teller Machine) system. In this proposed project multiple banking accounts can be access by using single smart ATM card by following banking regulations and we can carry single ATM smart card for multiple bank accounts. In present ATMs, the customer identifies him or herself by inserting an ATM card with magnetic strip or plastic Smart card with a chip that contains his or her account number. The customer then verifies his or her identity by entering a personal Identification number (PIN) of four digits. The use of the password or PIN schemes was introduced in the early days of ATM machines and its use has continued into today's highly networked and distributed systems. The system does not further identify the user if the password or PIN is incorrectly entered because the password or PIN is meant to be known only to the authorized user. This allows anybody related or unrelated to the user who knows the user's password or PIN to make illegal access or withdrawal.

Security is a serious issue in ATM system. ATM scam involves thieves putting a thin, clear, rigid plastic sleeve into the ATM card slot. By doing like this, when you enter your card, the machine can't read the strip, so it will be keep asking you to re-enter your PIN number. At that time, the hackers will notice the tap of your number and he can easily guess out the 4-digit PIN number. The thieves then remove the plastic sleeve and use their account. The main solution to this problem is OTP (One Time Password). Machine will generate OTP and send to user's registered mobile number. Then users have to type OTP and if it correct account will be open and user will be allowed for drawing money with his/her ATM card. Now the user can select the bank from which he/she is willing to perform transaction. After selecting the bank the request is sent to the corresponding bank through a network and links it with the banks server for accessing the database of the user or customer so that the transaction is processed.

II. EXISTING AND PROPOSED SYSTEMS

A. Existing System

In existing ATM (Automated Teller Machine) system all ATM machines are connected to their respective bank servers and all bank servers are connected to a single interface i.e. National Finance Switch (NFS). When user swipes his ATM card at respective bank's ATM machine, then that ATM machine directly links to its bank server for validation of ATM card. If the ATM card is belonging to the same bank then transaction proceeds else connects to the respective bank's server via NFS for further transaction. In most modern ATMs, the customer identifies him or herself by inserting a plastic card with magnetic strip or plastic smart card with a chip that contains his or her account number. The customer then verifies his or her identity by entering a pass code (i.e.) personal identification number (PIN) of four digits. If the number is entered incorrectly several times consecutively (usually three), most ATMs will retain the card as a security precaution to prevent an unauthorized user form discovering

the PIN by guesswork and so on. Moreover there is a limitation in transaction for the other bank customers in using the ATM of some other bank crossing the limit they have to pay transaction fees.

1. Disadvantages of Existing System

- User has to carry more than one ATM card for more number of bank accounts and also user has to remember password for each ATM card.
- User has to pay extra charges when transactions are done from different bank's ATM other than ATM card after fee transactions over.
- There is no OTP (One Time Password) system technology.

B. Proposed System

The existing ATM implementation requires minor change in present banking network. The idea behind this embedded smart ATM card is that the customers can use a single ATM card to operate different bank accounts instead of having individual card for each bank account and maintaining their pin's, carrying the cards safely which is a tedious process at present scenario. The technology behind the product of the service is that adding all the user bank accounts to an embedded smart ATM card. In this the user swipes his/her smart card in the ATM machine, then it request for OTP (One Time Password) in the server side. Machine will generate OTP (One Time Password) and send to user's registered mobile number. Then user have to type OTP and if it correct account will be open and user will be allowed for drawing money with his/her ATM card, then it displays the list of all banks that the user is having account. Now the user can select the bank from which he/she is willing to perform transaction. After selecting the bank the request is sent to the corresponding bank through a network and links it with the banks server for accessing the database of the user or customer so that the transaction is processed.

1. The advantages of proposed system

- User can perform transactions for all his bank Accounts using single ATM card.
- Enhanced security system.
- It generates very time new password to customer registered mobile number.
- More user friendly than present system.
- Reduces transaction cost.
- Make banking system more inclusive.

C. Literature Survey

Smart Card & Security Basics This Paper gives a overview of basics of smart card and its application and how it is used in various sectors. It also deals with security algorithm during encryption and decryption of data's. This Paper tells us that why card smart is preferred for banking system than other type cards. A Smart card is type of chip card embedded with computer chip that stores and transacts data between users. It was introduced in Europe nearly three decades ago to pay phone bills. Smart cards greatly convenience and security of any transaction. They provide tamper proof storage of user and account identity. Smart cards systems have proven to be more reliable than other machine-readable cards. The card is made from PVC, Polyester or Polycarbonate. The card layer are printed first and then laminated in a large press. The next step in construction is the blanking or die cutting. The card consists of several layers to prevent from card damage. Tools used for implementation are Fishbowl-To contain, isolate and monitor an unauthorized user and IDIOT (Intrusion Detection in Our Time)-A system that detects intrusions using pattern-matching.

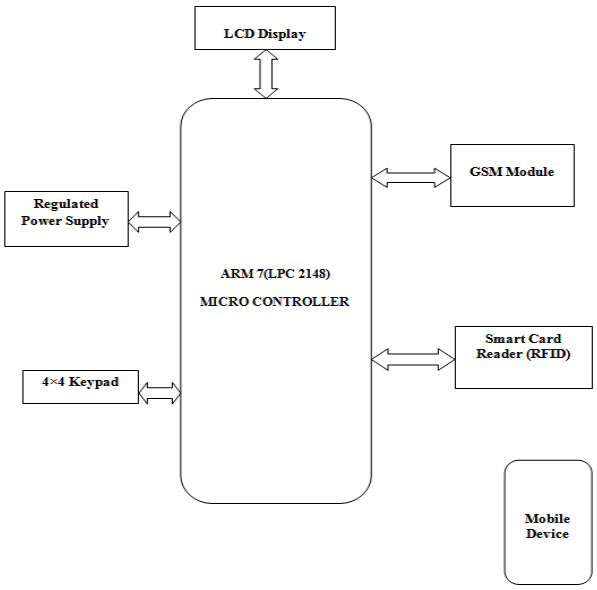

Fig.1. Block Diagram.

III. MODULES DESCRIPTION

A. Power Supply

Most of the digital logic circuits and processors work only in low DC voltage, so power supply unit is required for their accurate functioning. This supply unit of power consists of transformer, rectifier, filter and a regulator. The regulated power supply of about 230V is applied as input which is step down to 12V by the transformer. Output of the transformer is fed to bridge rectifier whose output would be a pulsating dc voltage. The obtained dc voltage is then fed to filter in order to remove all minimal ac components present even after rectification. Filter output is given to voltage regulator which results in pure constant dc voltage that is required by the circuit.

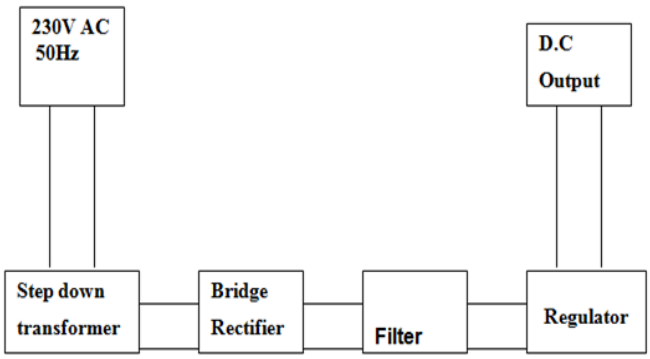

Fig.2. Power Supply.

B. Transformer

Usually, dc voltages of 5V, 9V, 12V are required to operate electronic circuits. These voltages are not available directly and must be obtained from the ac input of 230V at main supply which is to be step down as per the requirement. In order to obtain these voltages step down transformer is used.

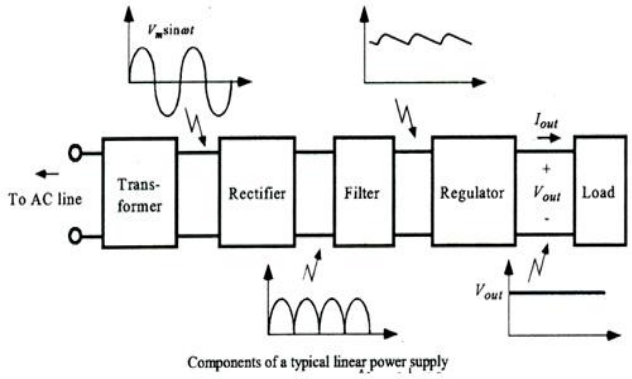

Fig.3.Transformer

C. Voltage Regulator

It is an electrical regulator which automatically maintains a constant dc voltage. In our project 5V power supply is needed for the circuit so we use LM7805 voltage regulator. The number 78 means positive supply and 05 represent voltage required. LM 7805 is very simple to use and it has three terminals. INPUT, COMMON, OUTPUT. Connect positive lead of dc power supply to INPUT, negative lead to COMMON. When we switch on the power 5V supply is obtained at OUTPUT terminal. LM7805 is 3 terminal 1A positive Voltage Regulator with thermal over load and short circuit protection.

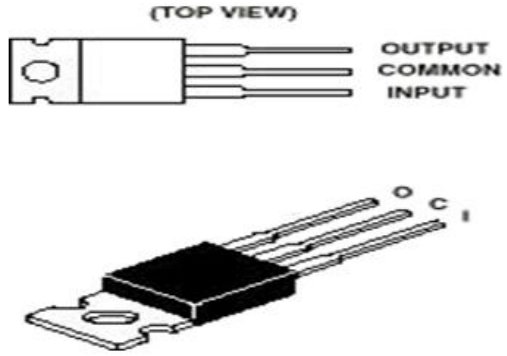

Fig.4. Voltage regulator LM7805.

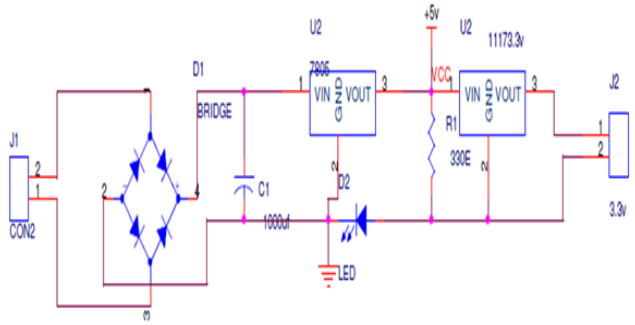

Fig.5. Circuit Diagram of Power Supply.

Thus the power supply circuit is very simple and easy to build with overheating protection which gives stable output of +5V dc voltage.

D. ARM Processor

ARM (Acorn RISC machine) is a family of instruction set architectures designed for computer processors introduced by British company 'ARM Holdings' in 1985. ARM was developed in 1980s by British company Acorn computers which manufactured computers and was used in personal computers. BBC Micro series of computers were first to use ARM based coprocessor modules followed by Acorn computers and later dominated by IBM PC. In early days the available processors like Motorola 68000 and National semiconductor 32016 were unsuitable and lacking. Then Acorn inspired by Berkeley RISC project, decided to design a new architecture for its own processor. Acorn RISC machine project started in October 1983 using VLSI technology. First ARM silicon was produced on April 1985. The first ARM based computer 'Acorn Archimedes' was released in 1987 and Acorn won "Queen's Award for Technology" in 1992 for the ARM. ARM Holdings develops architecture and Instruction set for ARM based products.

Companies like Apple, Qualcomm, Nvidia, Samsung electronics and Texas Instruments make chips that implement ARM architecture. As of 2013, 10 billion ARM processors have been produced and 50 billion in 2014 representing 95% of smart phones, 35% of Digital Televisions and Set Top Boxes, and 10% of mobile computers. Based on architecture several cores have been designed by ARM holdings, they are as follows in Architecture - Core order. ARMv1- ARM1, ARMv2- ARM2, ARM3, ARMv3- ARM6, ARM7, ARMv4- ARM8, ARMv4T- ARM7TDMI, ARM9TDMI, ARMv5- ARM7EJ, ARM9E, ARM10E, ARMv6- ARM11 and so on Latest architecture developed in 2011 was ARMv8-A with 64/32 bit width and ARM Cortex-A53, ARM Cortex A57 are the cores designed by using this architecture. In our project we use ARM7TDMI core which is 32-bit width.

1. ARM7 Family

ARM7TDMI, ARM7TDMI-S, ARM720T, and ARM7EJ-S processors come under ARM7 family. The ARM7TDMI core is the most widely used 32-bit embedded RISC micro-processor. Optimized cost and power of ARM7TDMI makes most of the applications reliable and effective with low power consumption, small size, and high performance. The ARM7EJ-S processor is a synthesizable core that provides all the features of the ARM7TDMI – small size, optimized power and the thumb instruction set including latest DSP extensions of ARM and enables acceleration of java-based applications. Strong-Arm® architecture software written for the ARM7TDMI processor core is 100% binary-compatible with all members of the ARM7 family. ARM7EJ-S is Forward-compatible with the ARM9, ARM9E and ARM10 families along with products of Intel's Strong ARM and x scale architectures. Thus designers can choose any of the available software-compatible processors as per the requirement of the

application accounting price-performance. ARM architecture is supported by the following

- Windows CE, Linux, palm OS and SYMBIAN OS and other operating systems
- Above 40 RTOS, including Wind River's vxworks, qnx and mentor graphics' vrtx etc
- Eda vendors which provide co-simulation tools
- Different kinds of software development tools

2. ARM7TDMI

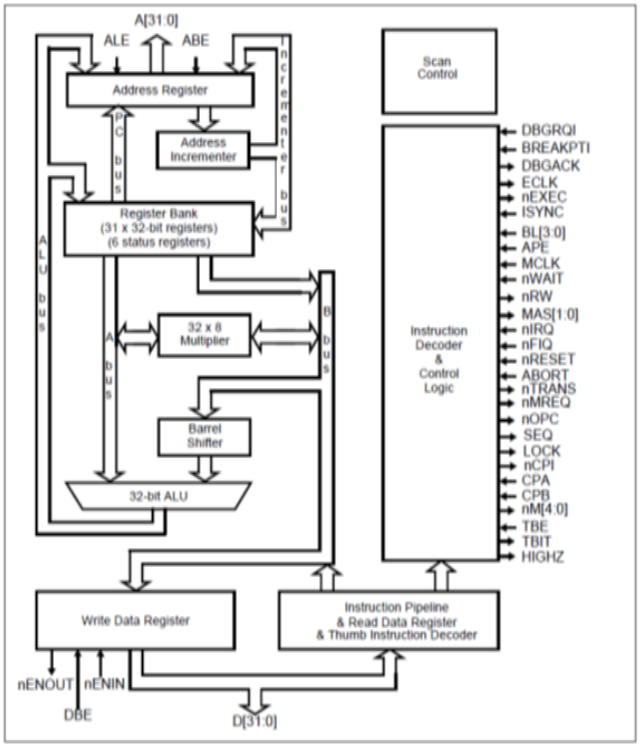

Fig.6. ARM7TDMI Core Diagram

Fig.6 shows the ARM7TDMI Core Diagram. It is based on the Von- Neumann architecture with both instructions and data carried by Data bus. Data from memory is accessed by Load, store, and swap instructions. 8-bit, 16-bit, and 32-bit data is carried.

E. LPC2148 Microcontroller

LPC2148 microcontroller board is based on a 16-bit/32-bit ARM7TDMI-S CPU with real-time emulation and embedded trace support, that combine microcontrollers with embedded high-speed flash memory ranging from 32 KB to 512 KB. A 128-bit wide memory interface and unique accelerator architecture enable 32-bit code execution at the maximum clock rate. For critical code size applications, the alternative 16-bit Thumb mode reduces code by more than 30% with minimal performance penalty. The meaning of LPC is Low Power Low Cost microcontroller. This is 32 bit microcontroller manufactured by Philips semiconductors (NXP). Due to their tiny size and low power consumption, LPC2148 is ideal for applications where miniaturization is a key requirement, such as access control and point-of-sale.

1. Features of LPC2148 Microcontroller

- 16-bit/32-bit ARM7TDMI-S microcontroller in a tiny LQFP64 package.
- 8 KB to 40 KB of on-chip static RAM and 32 KB to 512 KB of on-chip flash memory; 128-bit wide interface/accelerator enables high-speed 60 MHz operation.
- USB 2.0 Full-speed compliant device controller with 2 KB of endpoint RAM. In addition, the LPC2148 provides 8 KB of on-chip RAM accessible to USB by DMA.
- One or two (LPC2141/42 Vs, LPC2144/46/48) 10-bit ADCs provide a total of 6/14 analog inputs, with conversion times as low as 2.44 ms per channel.
- Single 10-bit DAC provides variable analog output (LPC2148 only)
- Two 32-bit timers/external event counters (with four capture and four compare channels each), PWM unit (six outputs) and watchdog.
- Low power Real-Time Clock (RTC) with independent power and 32 kHz clock input

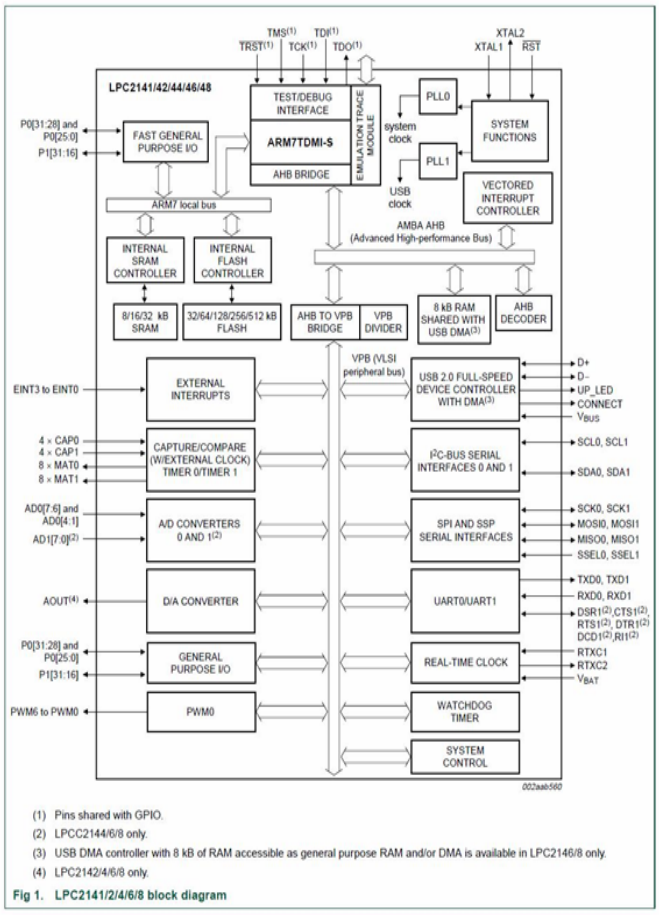

Fig.7. Block Diagram.

F. Liquid Crystal Display (LCD)

LCD is a display module finding its application in many electronic devices and circuits. LCDs are preferred to LEDs since they are easily programmable and can display various special characters. We use JHD 162A LCD. A 16x2 LCD displays 16 characters per line with 2 lines in total. It has two registers Command and Data.

1. Key Features:

- High contrast display
- 16 Characters x 2 Lines
- Built-in HD44780 Equivalent LCD Controller with extension driver
- Works directly with ATMEGA, ARDUINO, PIC and many other microcontroller/kits.
- 4 or 8 bit data I/O interface (in our project 4 bits used)
- Low power consumption.
- Power supply of +5v or 3.3v or 2.7v
- Operating temperature of -20 to +70°C
- EA DIP 162-DNLED: Green color display with LED backlight
- EA B200-9 a 9-PIN socket is used to detach LCD from kit.

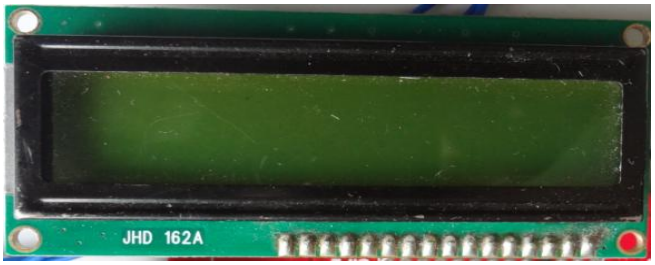

Fig.8. LCD.

G. GSM (Global System for Mobile Communication)

GSM, which stands for Global System for Mobile communications, reigns (important) as the world's most widely used cell phone technology. Cell phones use a cell phone service carrier's GSM network by searching for cell phone towers in the nearby area. Global system for mobile communication (GSM) is a globally accepted standard for digital cellular communication. GSM is the name of a standardization group established in 1982 to create a common European mobile telephone standard that would formulate specifications for a pan-European mobile cellular radio system operating at 900 MHz it is estimated that many countries outside of Europe will join the GSM partnership.

Fig.9. GSM Module.

H. RFID Reader

RFID technology is a simple method of exchanging data between two entities namely a reader/ writer and a tag. This communication allows information about the tag or the element carrying the tag to be determined and in this way it enables processes to be managed more easily.

An RFID system comprises a number of elements:

- **RFID reader / writer:** The reader write is used to communicate with tags that may pass within range. The RFID reader writer will normally be located in a fixed position and will be used to interrogate an RFID tag. Dependent upon the application and the format of the system and the RFID reader / writer, data may also be written to the RFID tag.
- **RFID tag*:*** RFID tags may also be called RFID transponders and are typically located on items that are mobile. They are small and generally cheap so that they can be attached to low cost (or high cost) items that need to have information associated with them. They are also generally considered as being disposable. The RFID tag contains data that is relayed to the reader, and in some systems it may also be possible to update the data within the tag to indicate that the tag and hence the item has undergone a specific stage in a process, etc.
- **RFID application software*:*** Like all systems these days, RFID systems need application software to run the overall system. With many systems there will be a number of different reader / writers and the data to and from these needs to be coordinated and analyzed. Application software will be required for these.

Although each RFID system will vary according to its requirements, these are the main elements which can be found. RFID technology has become widespread in its use. It offers May advantages and RFID is a particularly versatile system, being able to be used in many areas from shops, to manufacturing plants and also for general asset tracking as well as a host of other innovative applications The use of RFID, Radio Frequency Identification technology has become widespread within many areas of industry. RFID, Radio Frequency Identification provides an ideal technology for tracking assets and identifying them by using a simple low cost antenna attached to the item in question. Alongside RFID provides automatic data collection for which there are now several standards, and this enables RFID technology to be deployed in an effective and known manner. With RFID technology standardized, users are able to rely on the technology to provide the results they need.

1. RFID benefits

RFID technology provides many benefits for organizations ho use the system. RFID provide an easy way in which data can be collected and assets tracked:

- RFID technology provides a low cost form of data collection and asset management.
- RFID technology is widely used and therefore the economies of scale can be utilized to advantage.

- RFID technology enables data collection in environments that are unsuitable for workers as RFID tags can provide data in harsh environments.
- RFID is able to provide many reads and write functions per second, although it is not a very high data rate system, it is sufficient for most data monitoring applications.
- Data on an RFID tag can be altered repeatedly.
- RFID technology can be used with existing systems including bar codes and Wi-Fi.

As a result, RFID technology is being used increasingly as organizations need automatic methods of tracking assets and collecting data.

2. RFID Applications

RFID systems can be used in a variety of ways. There are many RFID applications which have gained popularity over the past years:

- Store product identification - RFID technology can be used within shops and stores as a form of alert for goods that have / have not been paid for.
- Asset tracking - RFID systems can monitor when RFID tags pass given points and in this way track the assets.
- Airline baggage identification - airlines need to monitor where baggage is and route it to the required destination. RFID tags can be attached to the bags to automate baggage routing.
- Parts identification - Data can be written to an RFID tags defining the identity of a part. This can then be used within a manufacturing, stock holding or other process to identify and locate parts.
- Production control - when items are manufactured they pass through many stages. RFID tags can be attached to items. These can be updated each time the item passes through a stage in production. This will enable the manufacturing system to track all items and know what stage they are at, and any other information such as test failures, etc.
- Employee access control - many companies today require intelligent access control systems. RFID technology is able to provide control as well as tracking, noting when cards pass particular access points, etc.
- Supply chain control - with manufacturing working to much tighter timescales with items such as Just-In-Time techniques being involved tracking of the items in a supply chain becomes more critical. RFID tags can be added to items to enable this to be undertaken accurately and more quickly.
- Vehicle tracking - RFID technology can be used to determine when vehicles have passed particular points and in this way their location can be approximately determined.
- Livestock identification - RFID tags can be injected into animals, under the skin and this enables accurate determination of which animal is which so that injections, etc can be given to the correct animal.

These represent some of the more standard applications for RFID technology. Many more specialized applications are also in use.

3. Working

In this project we are designing a system to monitor physical parameters of a location like temperature, smoke, rain fall and also the presence of a person say tourist. For this we are using different sensors integrated to an ARM7 micro controller. The data acquired continuously and sent to the remote server using Zigbee module. Presence of a tourist is detected by using the contactless RFID cards allotted to the tourist. Whenever tourist enters in to the location he should show the card at entrance. This can be used as a ticket at the same time the details of the candidate will be sent to the server through Zigbee while the low frequencies of 125 kHz were initially used, systems around the 13.56 license free frequency were also developed. The use of the higher frequency allowed for higher data rates and longer ranges to be achieved. The history of RFID has shown a steady development in RFID technology. Having its routes in the earliest days of electrical science and then radio, RFID history has come out of developments such as radar and IFF. Now RFID is a technology in its own right which is widely used and showing massive benefits to industry and society as a whole

Fig.10. RFID Tag.

IV. RESULTS

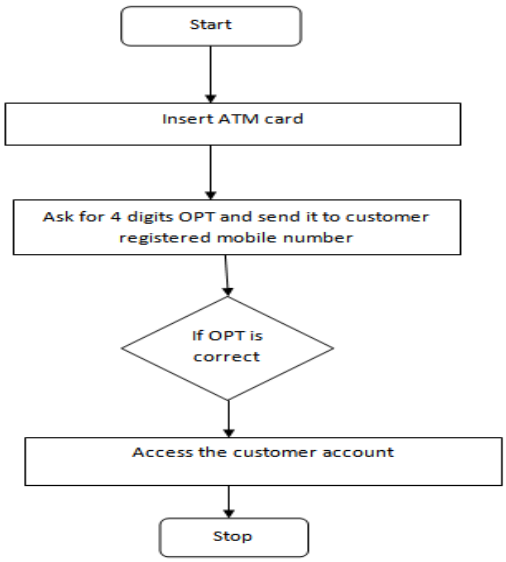

Fig.11. Flowchart for ATM Access.

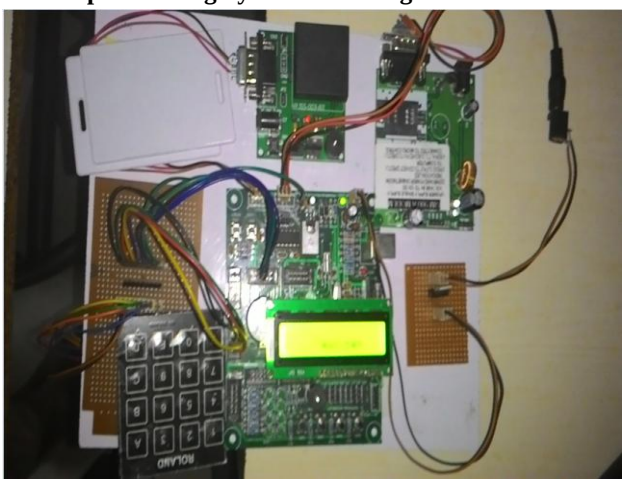

Fig.12. Final output of the system.

V. CONCLUSION AND FUTURE SCOPE

A. Conclusion

In this project user can manage his/her multiple accounts in various banks with the help of this single smart card ATM which provides easy access and reduces the complexity of managing more than one ATM card and their respective passwords. In this project OTP provides a more viable method of identifying users' sufficient security level for the ATM system. The use of human characteristics in this prototype development tackles a lot of security implementation issues in identification and authentication of ATM. The Implementation of ATM security by using OTP pin and GSM MODEM took advantages of the stability and reliability of security characteristics. Additional, the system also contains the original verifying methods which are inputting owner's password and which is send by the controller. The security features were enhanced largely for the stability and reliability of owner recognition. The whole system is built on the technology of embedded system which makes the system more safe, reliable and easy to implement. Hence, the vulnerabilities of the ATM fraud will be reduced in future.

B. Future Scope

In this project we are using OTP and GSM module as mode of authentication. It will be very easy to implement because each person has his own mobile phones for receiving OTP pin. Since more than one bank accounts are being added, the existing PIN security and finger print authentication is not sufficient enough, so we can also embed a biometric scan like face recognition and vein authentication in the smart card i.e. multi-component card. So that the user holds the card such that the face and vein rests on the biometric scan reader while he/she swipes the card and the image is authenticated at the real time. No one other than the user can use the card.

VI. REFERENCES

[1]. H. Lasisi and A.A. Ajisafe, "Development of stripe biometric based fingerprint Authentications Systems in automated teller", IEEE 2nd International Conference on Advances in Computation Tools for Engineering Applications, 2012.

[2]. Gokul.R, Godwin Rose Samuel.W, Arul.M, Sankari.C, "Multi Account Embedded ATM Card" International Journal of Scientific & Engineering Research, April-2013.

[3]. Harshal M. Bajad1Sandeep E. Deshmukh2Pradnya R.Chaugule3Mayur S. Tambade4, "Universal ATM Card System", International Journal of Engineering Research & Technology (IJERT), October – 2012.

[4]. Ronald Petrlic University of Paderborn, "Integrity Protection for Automated Teller Machines", International Joint Conference of IEEE 2011.

[5]. Ugochukwu Onwudebelu, Olumide Longe, Sanjo Fasola, Ndidi C. Obi and Olumuyiwa B. Alaba , "Real Time SMS-Based Hashing Scheme for Securing Financial Transactions on ATM Systems", 3rd IEEE International Conference on Adaptive Science and Technology (ICAST 2011).

[6]. IEEE Transactions on Pattern Analysis and Machine Intelligence, Vol. 20, No. 8, August 1998 Fingerprint Image Enhancement: Algorithm and Performance Evaluation by Lin Hong, Student Member, IEEE, Yifei Wan, and Anil Jain, Fellow, IEEE.

[7]. International Journal of Electronics Communication and Computer Engineering Volume 3, Issue (1) NCRTCST, ISSN 2249 –071X Implementation of ATM Security by Using Fingerprint recognition and GSM by PENNAM Krishnamurthy & Mr. M. Maddhusudhan Redddy.

[8]. An Improved Method for Extraction of Fingerprint Features Jianwei Yang, Lifeng Liu, and Tianzi Jiang*, Member, IEEE National Laboratory of Pattern Recognition, Institute of Automation, Chinese Academy of Sciences, Beijing 100080, P. R. China.

[9]. Volume 3, No. 11, November 2012 Journal of Global Research in Computer Science Research Paper High Protection Human Iris Authentication In New ATM Terminal Design Using Biometrics Mechanism.

[10]. Indian Journal of Science and Technology Supplementary Article ATM Terminal Design using Biological Technology by V. Khanaa and Krishna Mohanta.

[11]. International Journal of Research in Engineering and Science (IJRES) ISSN (Online): 2320-9364, ISSN (Print): 2320-9356 www.ijres.org Volume 1 Issue 3 ǁ July. 2013 ǁ PP.27-33 Real Time Sms-Based Hashing Scheme for Securing Financial Transactions on ATM Terminal.

Author's Profile:

G Manohar Babu , Pursuing M.Tech in Embedded System from Jyothishmathi College of Engineering and Technology, TS, India, Email: manugj01@gmail.com.

R.Anil Kumar, Working as a Asst Prof in Department of Electronics&Communication in Jyothishmathi College of Engineering and Technology.