International Journal of Advanced Technology and Innovative Research

ISSN 2348–2370
Vol.07,Issue.11,
August-2015,
Pages:2036-2040

www.ijatir.org

A Novel Single Phase Multilevel Inverter Structure with Fewer Switching Components

T. SRIPAL REDDY[1], KAVITHA ANDEM[2]

[1]Assoc Prof & HOD, Dept of EEE, Sarada Institute of Engineering & Technology, Raghunadhapalem, Khammam(Dt), TS, India.
[2]PG Scholar, Dept of EEE, Sarada Institute of Engineering & Technology, Raghunadhapalem, Khammam (Dt), TS, India.

Abstract: Photovoltaic power generation employs solar panels composed of a number of solar cells containing a photovoltaic material. Multilevel inverter structures have been developed to overcome shortcomings in solid-state switching device ratings so that they can be applied to high voltage electrical systems. The multilevel voltage source inverters unique structure allows them to reach high voltages with low harmonics without the use of transformers. This makes unique power electronics topologies suitable for Flexible AC Transmission Systems and custom power applications. The use of a multilevel converter to control the frequency, voltage output including phase angle, real and reactive power flow at a dc/ac interface provides significant opportunities in the control of distributed power systems. In this work, new system architecture for 7-level MLI system is proposed. This method allows the renewable energy sources to deliver the load together or independently depending upon their availability. The proposed inverter uses less number of switches when compared with the conventional multilevel inverter. The simulations results are obtained using MATLAB/SIMULINK software.

Keywords: Flexible AC Transmission Systems, Wind Energy System, Photovoltaic (PV), Grid And Multilevel Inverter.

I. INTRODUCTION

Renewable energy sources (RESs) have experienced a rapid growth in the last decade due to technological improvements, which have progressively reduced their costs and increased their efficiency at the same time [1]. Moreover, the need to depend less on fossil fuels and to reduce emissions of greenhouse gases, requires an increase of the electricity produced by RESs. This can be accomplished mainly by resorting to wind and photovoltaic generation, which, however, introduces several problems in electric systems management due to the inherent nature of these kinds of RESs [2]. In fact, they are both characterized by poorly predictable energy production profiles, together with highly variable rates. As a consequence, the electric system cannot manage these intermittent power sources beyond certain limits, resulting in RES generation curtailments and, hence, in RES penetration levels lower than expected. A novel power conversion structure for grid-connected photovoltaic applications is presented in [3]. This structure is based on a multilevel inverter. New energy sources have proposed and developed due to the dependency and constant increase of costs of fossil fuels.

On other hand, fossil fuels have a huge negative impact on the environment. In this context, the new energy sources are essentially renewable energies. It is estimated that the electrical energy generation from renewable sources. In generally solar and wind powers are complementary in nature. Therefore the hybrid photovoltaic and wind energy system has higher dependability to give steady power than each of them operating individually in [4]. Other benefit of the hybrid system is that the amount of the battery storage can be decreased as hybrid system is more reliable compared to their independent operation. The first one is a DC/DC power converter that is used to operate the PV arrays at the maximum power point. The other one is a DC/AC power converter to interconnect the photovoltaic system to the grid.

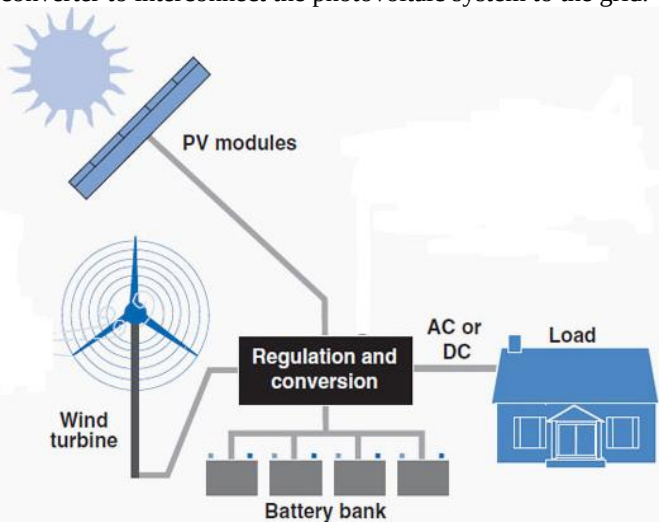

Fig1. Combination of multiple sources.

Main advantages of using multilevel inverter topology are reduction of power ratings of power devices and reduction in their cost [5]. The basic concept of a multilevel converter is to get higher operating voltage using a series connection of power semiconductor switches with much lower voltage rating compared to power switches used in conventional two-

level inverter[6]. These power switches are controlled such that more number of voltage levels is generated at the output using multiple dc sources. The attractive features of a multilevel inverter are that they can generate the output voltages with very low THD, can draw input current with low distortion, and can operate at wide range of switching frequencies from fundamental frequency to very high frequency. This paper proposes the 5-Level & 11-Level Multilevel Inverter Fed Load with PV source through Matlab/Simulink platform and results are presented.

II. CONTROL SCHEME

The block diagram of the proposed architecture is shown in Fig.2 the input to the battery should be a constant voltage for the smooth charging of the battery. So the output of the solar panel is fed through a boost converter to keep the output of the solar panel voltage to a constant value of 12V. Here the wind generator used is a 230V DC shunt generator. The output of the wind generator is fed through a buck converter to make the output voltage 12V. So the battery will be charged from both solar and wind power. The output of the battery is fed to a 5 level multilevel inverter which converts it to ac.

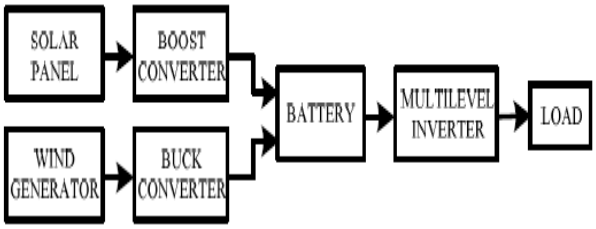

Fig2..Block diagram of proposed architecture.

A Photovoltaic (PV) system directly converts solar energy into electrical energy. The basic device of a PV system is the PV cell. Cells may be grouped to form arrays. The voltage and current available at the terminals of a PV device may directly feed small loads such as lighting systems and DC motors or connect to a grid by using proper energy conversion devices.

Fig3. Block diagram representation of Photovoltaic system.

This photovoltaic system consists of three main parts which are PV module, balance of system and load. The major balance of system components in this systems are charger, battery and inverter. The Block diagram of the PV system is shown in Fig.3. A. Photovoltaic cell A photovoltaic cell is basically a semiconductor diode whose p–n junction is exposed to light. Photovoltaic cells are made of several types of semiconductors using different manufacturing processes. The incidence of light on the cell generates charge carriers that originate an electric current if the cell is short circuited1. The equivalent circuit of PV cell is shown in the fig.4. The series resistance RS represents the internal losses due to the current flow. Shunt resistance Rsh, in parallel with diode, this corresponds to the leakage current to the ground. The single exponential equation which models a PV cell is extracted from the physics of the PN junction and is widely agreed as echoing the behavior of the PV cell. The grid integration of RES applications based on photovoltaic systems is becoming today the most important application of PV systems, gaining interest over traditional stand-alone systems. This trend is being increased because of the many benefits of using RES in distributed (aka dispersed, embedded or decentralized) generation (DG) power systems.

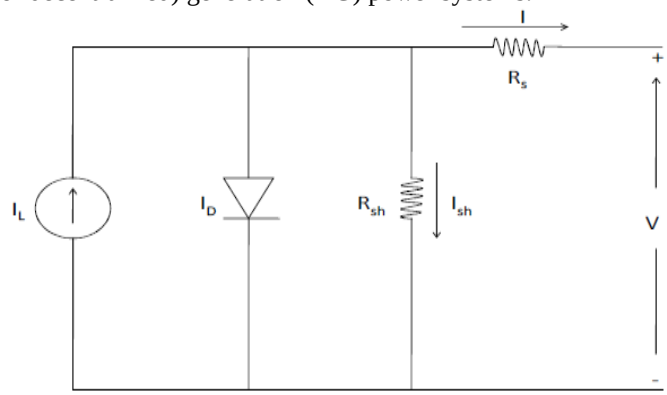

Fig.4. Practical PV device.

The decreasing level of fossil fuels isn't the only reason why we should begin to use renewable energy. Pollution is becoming a huge problem in many countries around the world, especially the developing world. With carbon emissions at an all time high, air quality can be very low in some areas, this can lead to respiratory diseases and cancer. The main reason to switch to cleaner energy production methods is the global warming aspect. The more carbon dioxide we pump into the atmosphere, the greater the effect becomes. We can't just stop using fossil fuels thinking that global warming will go away, but we can slow down and dilute the effects of global warming through the wide spread use of renewable energy resources.

III. CONVERTER TOPOLOGY

There are several PV system configurations. These configurations are the centralized technology, string technology, multi-string technology and AC-module technology. The number and type of power converters that is used to interconnect the PV system to the grid is dependent of the technology that is used. The multi-string technology has several different groups of PV arrays. Each group is connected in series with a DC/DC converter. This allows using this technology with some multilevel topologies, such as, the cascaded multi-cell inverters. This topology is based on the series connection of single-phase inverters with separated DC sources. In this way, each group of PV arrays will be used as a single DC source. This allows avoiding high voltage amplification [7]. In order to obtain a galvanic connection between the grid and the PV generator many PV systems use a

power transformer, avoiding that a leakage current may flow through the capacitance between PV generator and ground. Some systems use a transformer embedded in a high-frequency DC/DC converter. Others use a line frequency transformer at the output of the inverter.

A. DC-DC CONVERTER

For converting dc voltage generated from solar photovoltaic system and wind energy system to battery voltage level, two DC-DC converters are used here. Boost converter is employed to increase the voltage of solar photovoltaic system to battery voltage level. Buck converter is used to reduce the voltage developed by wind energy system to battery voltage level.

1. Buck Converter

Output voltage of buck converter is Vo=D Vd, where Vd is the input voltage and D is the duty ratio. The buck converter is used to reduce the output voltage of the wind generator to 12V so as to charge the battery.

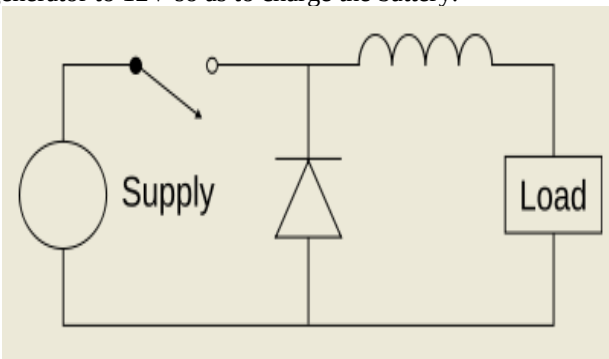

Fig5. Buck converter.

The basic operation of the buck converter has the current in an inductor controlled by two switches (usually a transistor and a diode). In the idealized converter, all the components are considered to be perfect. Specifically, the switch and the diode have zero voltage drop when on and zero current flow when off and the inductor has zero series resistance. Further, it is assumed that the input and output voltages do not change over the course of a cycle.

2. Boost Converter

Output voltage of the boost converter is Vo=Vd/(1-D), where Vd is the input voltage and D is the duty ratio. The boost converter is used to increase the output voltage of the solar panel to 12V.

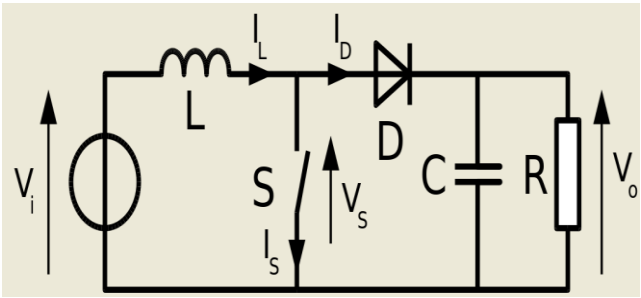

Fig6. Boost converter.

A boost converter (step-up converter) is a DC-to-DC power converter with an output voltage greater than its input voltage. It is a class of switched-mode power supply (SMPS) containing at least two semiconductors (a diode and a transistor) and at least one energy storage element, a capacitor, inductor, or the two in combination. Filters made of capacitors (sometimes in combination with inductors) are normally added to the output of the converter to reduce output voltage ripple.

B. Multilevel Inverter

The modified single phase five-level inverter uses a full-bridge structure having an auxiliary circuit. The circuit diagram is shown in Fig. 7 The voltage across each DC capacitor is Vdc/2. The working principle of the suggested inverter is to create five levels of output voltage, Vdc, Vdc/2, 0, - Vdc/2 and - Vdc.

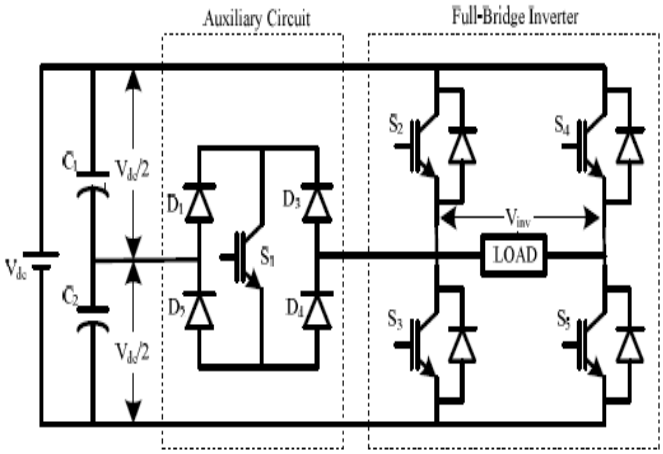

Fig7. Circuit diagram of five level inverter.

An auxiliary circuit consisting of four diodes and a switch is used for generating five voltage levels at the output. Using proper switching sequence in this modified circuit generates five levels in output voltage [8],[9]. Figure shows multistring seven level inverter connected to PV consists of three PV strings and two auxiliary circuits and a full bridge inverter

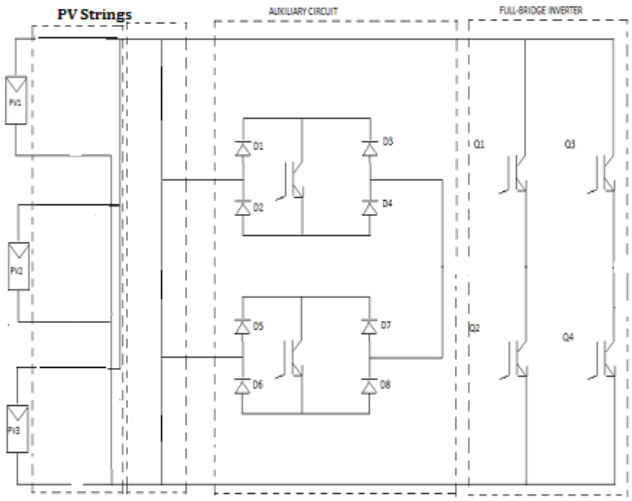

Fig8. PV Fed Multistring Seven Level Inverter

IV. SIMULATION RESULTS AND DISSCUSION

Here simulation is carried out, based on several cases, 1). Proposed Single Phase 5-Level Multilevel Inverter Topology Application to RES. 2). Proposed Single Phase 11-level Multilevel Inverter Topology Application to RES

Case1: Proposed Single Phase 5-Level Multilevel Inverter Topology Application to RES

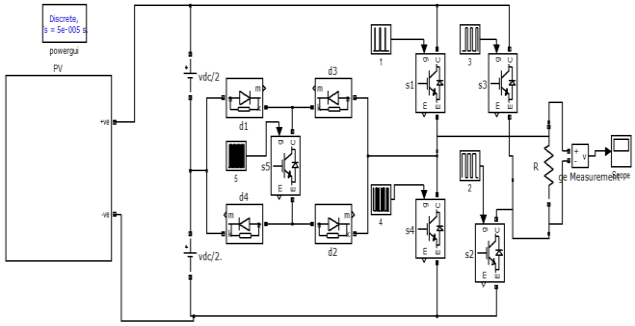

Fig.9 Matlab/Simulink Model of Proposed Single Phase Multilevel Inverter Topology Applications to RES

Fig.9 shows the Matlab/Simulink Model of Proposed Single Phase Multilevel Inverter Topology Applications to RES.

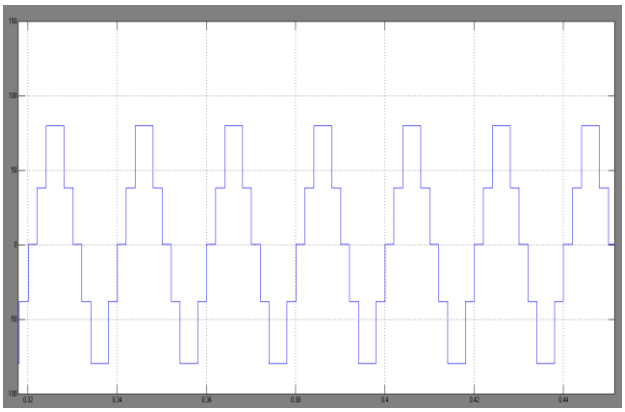

Fig10. Output Voltage of Proposed Inverter Topology

Fig.10 Five Level Output Voltage of Proposed Inverter Topology with PV Source

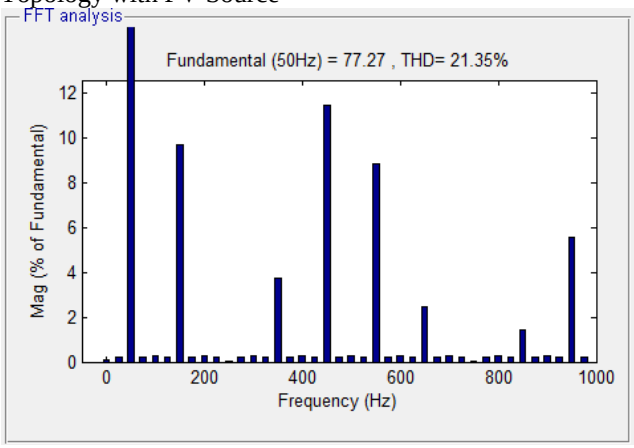

Fig11. THD Analysis of Output Voltage of Proposed Inverter Topology with PV Source.

Fig.11 THD Analysis of Output Voltage of Proposed Inverter Topology with PV Source. Get 21.35%.

Case 2: Proposed Single Phase 7-Level Multilevel Inverter Topology Application to RES

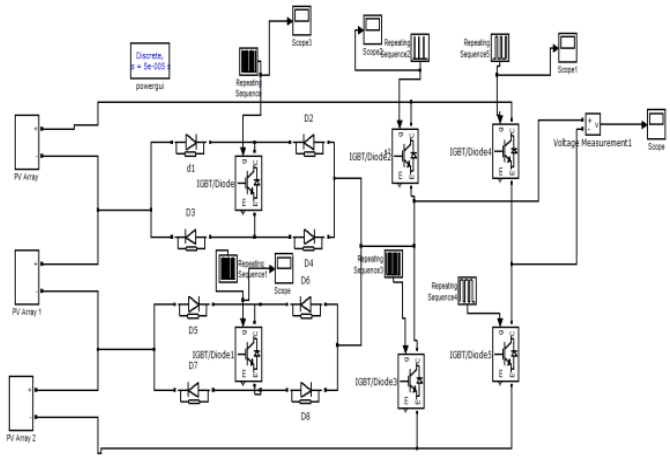

Fig12. Simulink model of PV fed multistring seven level inverter

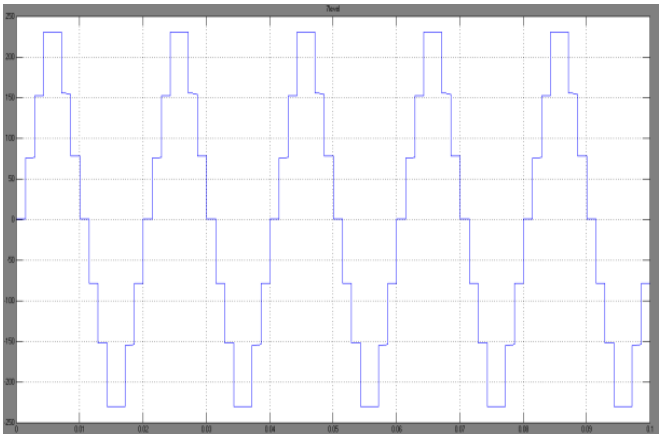

Fig13.Simulation waveform of model of PV fed multistring seven level inverter

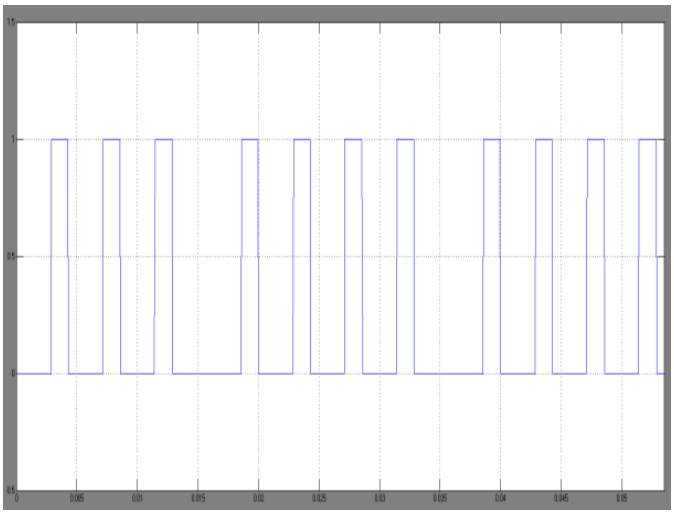

Fig.14. Simulation waveform switching pulses of PV fed multistring seven level inverter.

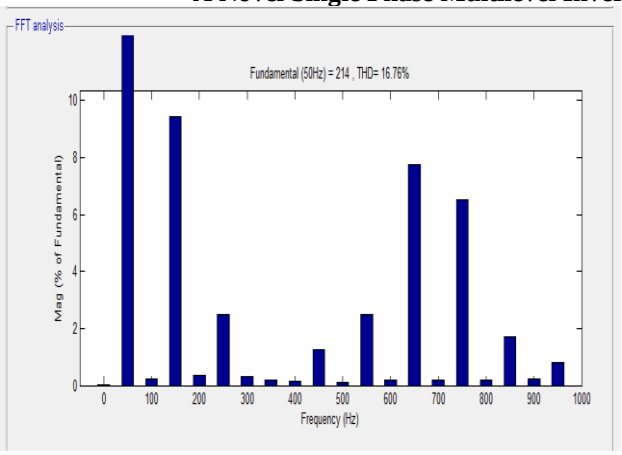

Fig.15. FFT analysis of multistring seven level inverter THD=16.76%.

V. CONCLUSION

Recently, developments in power electronics and semiconductor technology have lead improvements in power electronic systems. This paper provides the modeling and simulation of a single phase 11 level inverter fed from PV source with advanced multilevel inverter. Solar and wind power are the two sources being used. The proposed system reduces both voltage THD and implements a PV energy system. The proposed 5 & 7 level inverter topology has less number of switches and input DC sources in comparison with conventional cascaded H-bridge configuration. The quality of voltage is improved as the number of levels increases and THD also drastically reduces. However, it causes to the low number of switching devices and other components, and decreases the cost and control complexity and tends to maximize the overall reliability and efficiency of the converter.

VI. REFERENCES

[1] E. Beser, B. Arifoglu, S. Camur, E. K Beser, “A grid-connected photovoltaic power conversion system with single-phase multilevel inverter”. Solar Energy, vol. 84, No 12, pp. 2056-2067, 2010

[2] Shagar Banu M, Vinod S, Lakshmi.S, “Design of DC-DC converter for hybrid wind solar energy system”,2012 International conference on Computing, Electronics and Electrical Technologies.

[3] K.N.V Prasad, G.Ranjith Kumar, T. Vamsee Kiran, G.Satyanarayana., "Comparison of different topologies of cascaded H-Bridge multilevel inverter," Computer Communication and Informatics (ICCCI), 2013 International Conference on , vol., no., pp.1,6, 4-6 Jan. 2013.

[4] J. Rodriguez, J. S. Lai, F. Z. Peng, “Multilevel inverters: a survey of topologies, controls, and applications”. IEEE Transactions on Industrial Electronics, vol. 49, No 4, pp. 724-738.

[5] J. Rodríguez, J. S. Lai, and F. Z. Peng, ―Multilevel inverters: A survey of topologies, controls, and applications, IEEE Trans. Ind. Electron., vol. 49, no. 4, pp. 724–738, Aug. 2002

[6] M. Calais and V. G. Agelidis, ―Multilevel converters for single-phase grid connected photovoltaic systems—An overview, in Proc. IEEE Int. Symp. Ind. Electron., 1998, vol. 1, pp. 224–229.

[7] K.N.V. Prasad, G.Ranjith Kumar, Y.S. Anil Kumar, G. Satyanarayana, "Realization of cascaded H-bridge 5-Level multilevel inverter as Dynamic Voltage Restorer," Computer Communication and Informatics (ICCCI), 2013 International Conference on , vol., no., pp.1,6, 4-6 Jan. 2013.

[8] S. Alepuz, S. Busquets-Monge, J. Bordonau, J. Gago, D. Gonzalez, and J.Balcells, “Interfacing renewable energy sources to the utility grid using a three-level inverter,” IEEE Trans. Ind. Electron., vol. 53, no. 5, pp. 1504–1511, Oct. 2006

[9] Jeyraj selvaraj and Nazrudin A.Rahim, “Multilevel inverter for grid connected pv system emplyoing digital PI controller,” IEEE Transactions on Industrial Electronics, vol.56, No1.,January 2009.