International Journal of Advanced Technology and Innovative Research

ISSN 2348–2370
Vol.07,Issue.09,
August-2015,
Pages:1586-1592

www.ijatir.org

Hysteresis and Fuzzy Logic Based Control Methods for Shunt Active Power Filters to Improve Power Quality

KANDIMALLA SHEKAR REDDY[1], KONDALA RAO DAGGUMATI[2]

[1]PG Scholar, Dept of EEE, Arjun College of Technology & Sciences, Batasingaram(V), Hayathnagar, RR(Dt),Telangana, India.
[2]Assoc Prof, Dept of EEE, Arjun College of Technology & Sciences, Batasingaram(V), Hayathnagar, RR(Dt),Telangana, India.

Abstract: Modern industrial equipments are more sensitive to these power quality problems than before and need higher quality of electrical power. Power electronic based power processing offers higher efficiency, compact size and better controllability. But on the flip side, due to switching actions, these systems behave as non-linear loads. This creates power quality problems such as voltages Sag/Swell, flickers; harmonics, asymmetric of voltage have become increasingly serious. Conventionally, to reduce harmonics passive LC filters and to improve power factor of the ac loads capacitor banks were used. However these solutions have the demerits of large size and weight, fixed compensation design, increased operating losses and risk of resonance occurrence. Among the active power filter configurations, shunt APF is the most important and most widely used in industrial processes. The main duty of a shunt APF is to inject into the system a compensating current (active filter current) so as to make the source current sinusoidal and in phase with the source voltage. This paper presents a fuzzy based hysteresis current-control (HCC) strategy for a single-phase half-bridge shunt active power filter. The half-bridge topology employs two switching devices and two capacitors connected in series. The proposed concept is verified by using matlab/simulink software and the corresponding results are presented.

Keywords: Shunt Active Power Filter; Half-Bridge Topology; Hysteresis Current-Control, fuzzy logic controller.

I. INTRODUCTION

With the rapid development of power electronics, Flexible AC Transmission Systems *(*FACTS) devices have been proposed and implemented in power systems. FACTS devices can be utilized to control power flow and enhance system stability. In recent years with the development of power semiconductor technology power electronics based devices such as static var compensators (SVCs), adjustable speed drives (ASDs) and uninterruptible power supplies (UPSs) are widely employed in various applications. Because of their nonlinear V-I characteristics these devices draw current with harmonic content and reactive power from AC mains [1]. Many of harmonic sources are single-phase loads, such as computers, fluorescent compact lamps, copiers, printers and other home and office electronic equipments. Adjustable speed drives employing the use of induction motors are widely used in process control in varied applications. The main benefit from ASDs is that their energy efficiency to the tune of 30-50%. This feature alone makes them very attractive to consumers. ASDs also improve system efficiency, equipment reliability, enhance product quality and reduce product waste and the noise level. However, the ASDs use power electronic devices for their switching operation which inject harmonics into the connected system. The increased penetration of these drives in electric utility system produces high harmonic content in current and voltage. The harmonic currents result in excessive heating in rotating machines.

The harmonic currents, depending on their frequency, cause additional rotating magnetic fields in the motor [2]. The magnetic field due to fifth harmonic, being the most prevalent tries to weaken the main field and rotates the motor in the opposite direction as the fundamental. Harmonic currents also cause overheating due to high-frequency eddy currents and hysteresis losses in the stator and rotor core and skin-effect losses in the windings. A comprehensive literature review is available on custom power devices which were invented by Hingorani [3] and are being used in distribution systems. Power quality problems in distribution system mainly include poor power factor, poor voltage regulation and harmonics. Also, additional problems due to neutral current and load unbalancing have to be studied and system design has to be through. The trend nowadays is shift focus from passive filters to active filters. Some problems related to passive filters include selective filtering, large sized inductors and capacitors are needed and they are prone to detuning and resonance problems. To avoid harmonic distortion on system voltages it is necessary to mitigate the harmonics at costumer's side. This is the best way to avoid problems on neighbors' facilities and to keep a good electric power quality service. The harmonic currents on the electrical grid degrade the voltages waveform.

The Shunt Active Power Filters are nowadays a good solution, since they can solve harmonic current problems, and also compensate the power factor. Shunt Active Power Filters have various advantages over Passive ones, since they don't need to be configured to a specific harmonic, but, all

harmonics can be simultaneously compensated. To assure a good performance Passive Power Filters have to be carefully tuned for which particular case. Active Power Filters can be easily installed without any commissioning, and instantaneously compensate the current harmonics and the power factor [3-4]. In this paper, the fuzzy based hysteresis current-control (HCC) strategy for single-phase half-bridge shunt active power filters is presented to control the linear and non linear loads. The HCC offers advantages such as higher accuracy, fast dynamic response, robustness and simplicity in implementation [8]. The operation of the single-phase half- bridge APF with the HCC strategy was verified through computer simulations with Matlab/Simulink tool.

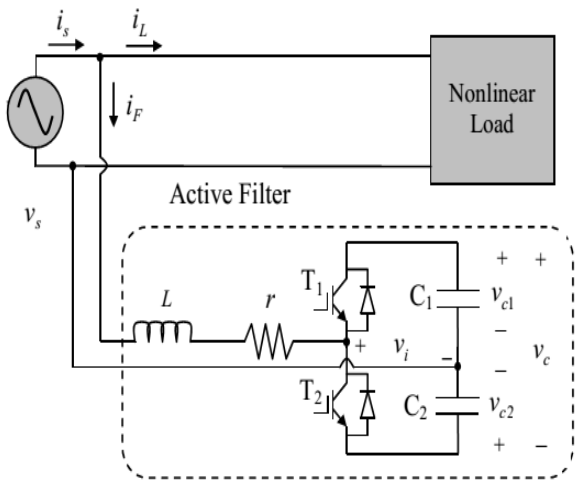

Fig1. Single-phase half-bridge shunt active power filter.

II.HALF-BRIDGE ACTIVE FILTER MODELING

Fig.1 shows a single-phase half-bridge active filter connected in parallel with the nonlinear load and AC source. The active filter is realized using a voltage-source inverter (VSI) consisting of two switching devices (T_1 and T_2) with two output capacitors connected in series. It can be seen that one terminal of the AC source is connected to the midpoint of the output capacitors so that the overall operation requires two less number of switching devices. The main objective of the active filter is to inject a compensating current (i_F) into the ac source (v_s) to cancel the harmonics contained in the nonlinear load current (i_L). For a correct operation, it is necessary that the resulting source current (i_s) has the same shape and in phase with the AC source voltage [5]. The equations describing the operation of the active filter are

$$L\frac{di_F}{dt} + ri_F = v_s - uv_{c1} - (1-u)v_{c2} \tag{1}$$

$$C_1\frac{dv_{c1}}{dt} = ui_F \tag{2}$$

$$C_2\frac{dv_{c2}}{dt} = (1-u)i_F \tag{3}$$

where r is the inductor parasitic resistance, u is the control input which takes 1 for the on state of T_1 and 0 for the on state of T_2, $Vs=V_m \sin(\omega t)$ is the AC source voltage with an amplitude of V_m and angular frequency of ω, and $V_c=V_{c1}-V_{c2}$ is the DC output voltage. For an effective control action, it is needed to have $V_{c1}>V_m$ and $V_{c2}<-V_m$. The output voltage produced by switching (V_i) is half the DC output voltage when T_1 is turned on and has the same value with reversed polarity when T_2 is turned on. On the other hand, it is assumed that the output capacitors are equal ($c_1=c_2$). However, in practice, these capacitors are not of equal value resulting in an imbalance in V_{c1} and V_{c2}. Again, for a successful operation, this imbalance should be eliminated.

III.CONTROL STRATEGY DESIGN

Regardless of the topology, the control strategy of a single phase active filter has two objectives. The first objective is to assure that the source current remains sinusoidal and in phase with the AC source voltage. The second objective is the stabilization of the DC output voltage (V_C) at a desired level [6]. In order to achieve these objectives, two control loops are needed; an inner loop for shaping the source current and an outer loop for controlling the DC voltage.

A. Hysteresis Current Control

In order to shape the source current into sinusoidal and in phase with the source voltage, the inner current loop should force the source current i_s to track its reference [14]

$$i_s^* = I_m(t)\sin(\omega t) \tag{4}$$

Where $I_m(t)$ is a time-varying amplitude based on the power demanded by the nonlinear load. Having computed i_s^*, the reference for the active filter's current can be generated by measuring and subtracting the load current (i_L) from i_s^*, as shown below

$$i_F^* = i_s^* - i_L \tag{5}$$

In the HCC method, the main aim is to maintain the active filter current (i_F) within a hysteresis band (h) about the reference current wave (i_F^*) by switching T_1 and T_2 so that when T_1 is turned on, T_2 is off and when T_2 is turned on, T_1 is off. This means that only one of the switching devices can be on at any given time. However, the switching frequency in the HCC method is not constant.

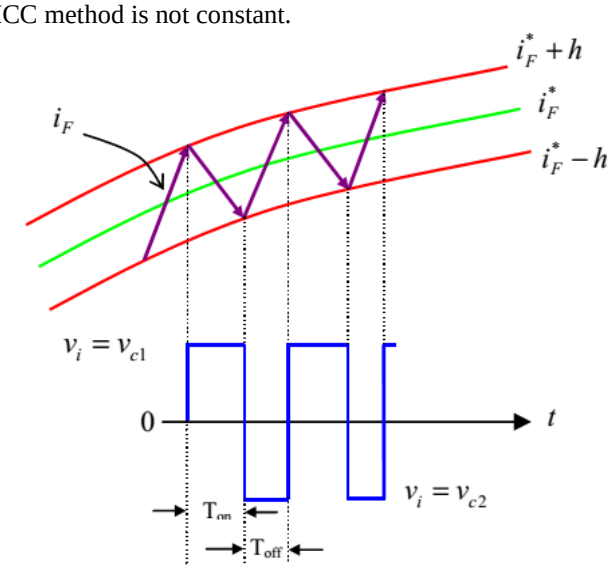

Fig2. Hysteresis Switching.

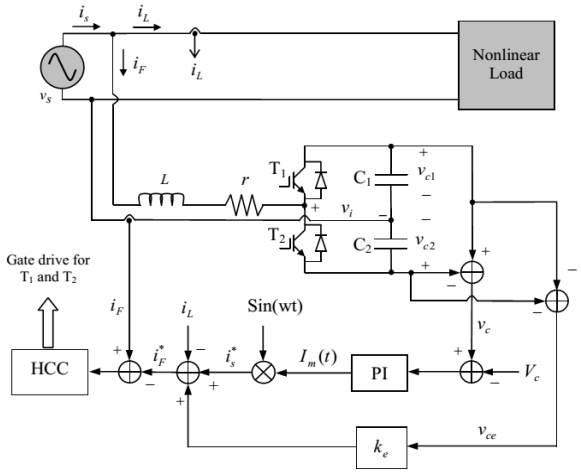

Fig3. Block diagram of the single-phase half-bridge shunt active power filter with the HCC strategy.

The use of hysteresis band is essential in a practical implementation as it avoids the uncontrollable switching frequency operation of the active filter. The on and off periods of the switching devices during the evolution of the active filter current are shown in Fig. 2. When the active filter current i_F hits the upper bound of the hysteresis ($i_F^* + h$), T1is turned on (u=1) so as to direct i_F toward its reference. Substituting u=1 into (1) gives

$$L\frac{di_F}{dt} + ri_F = V_m \sin(\omega t) - v_{c1} \tag{6}$$

It can be easily seen from (6) that i_F starts to decrease with a negative slope since the voltage across C_1 is always greater than the maximum positive value of V_s ($V_{c1}>V_m$). Conversely, when the active filter current i_F hits the lower bound of the hysteresis ($i_F^* - h$), T_2 is turned on (u=0) so as to direct i_F toward its reference. Substituting u=0 into (1) gives

$$L\frac{di_F}{dt} + ri_F = V_m \sin(\omega t) - v_{c2} \tag{7}$$

Again, it can be seen from (7) that i_F increases with a positive slope since the voltage across C_2 is always less than the maximum negative value of V_s ($V_{c1}<-V_m$). Therefore, the switching action of T_1 and T_2 during one complete cycle can be defined as

$$T_1 = \begin{cases} on & when \quad i_F > i_F^* + h \\ off & when \quad i_F < i_F^* - h \end{cases} \tag{8}$$

$$T_2 = \begin{cases} off & when \quad i_F > i_F^* + h \\ on & when \quad i_F < i_F^* - h \end{cases} \tag{9}$$

Hence, the active filter current is forced to follow its reference waveform by switching on T_1 if $i_F > i_F^* + h$ by switching T_2 on $i_F < i_F^* - h$.

B. Output Voltage Control

The second objective was the stabilization of the DC output voltage at a desired level. In order to accomplish this, it is needed to regulate the source current amplitude to a desired reference. When the source current regulation is achieved successfully, the output voltage is indirectly reached to its reference V_c. The value of source current amplitude reference is determined by an outer voltage loop using a proportional integral (PI) controller as follows [8]-[14]

$$I_m(t) = k_p(v_c - V_c) + k_i\int(v_c - V_c)dt \tag{10}$$

Where K_p and K_i are the proportional and integral gains, respectively.

C. Elimination of Imbalance in Capacitor Voltages

The existence of imbalance in the capacitor voltages (V_{c1} and V_{c2}) has been reported. One of the reasons of this imbalance comes from a DC offset determined by the initial condition of the system. The other reason is the non equal capacitance values ($C_1 \neq C_2$) in practice. This imbalance in capacitor voltages can be eliminated, inspired from the method presented in, by feeding back the imbalance variable ($V_{ce}= -V_{c1}-V_{c2}$) through a gain (k_e) and adding its output to i_F^* as follows

$$i_{Fe}^* = i_F^* + k_e v_{ce} \tag{11}$$

In this case, the active filter current (i_F) tracks the modified reference (i_{Fe}^*) instead of i_F^*. The block diagram of the single phase half-bridge shunt active power filter with the HCC strategy is shown in Fig. 3

IV. INTRODUCTION TO FUZZY LOGIC CONTROLLER

A new language was developed to describe the fuzzy properties of reality, which are very difficult and sometime even impossible to be described using conventional methods. Fuzzy set theory has been widely used in the control area with some application to dc-to-dc converter system. Furthermore, design of fuzzy logic controller can provide desirable both small signal and large signal dynamic performance at same time, which is not possible with linear control technique. Thus, fuzzy logic controller has been potential ability to improve the robustness of dc-to-dc converters. The basic scheme of a fuzzy logic controller is shown in Fig 5 and consists of four principal components such as: a fuzzy fication interface, which converts input data into suitable linguistic values; a knowledge base, which consists of a data base with the necessary linguistic definitions and the control rule set; a decision-making logic which, simulating a human decision process, infer the fuzzy control action from the knowledge of the control rules and linguistic variable definitions; a de-fuzzification interface which yields non fuzzy control action from an inferred fuzzy control action [10].

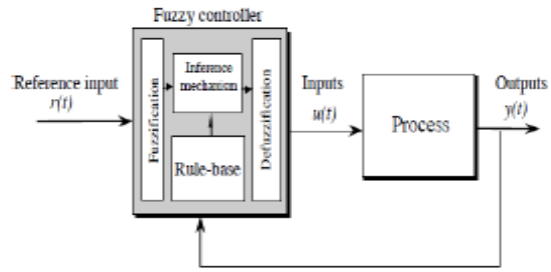

Fig4. General structure of the fuzzy logic controller.

The fuzzy control systems are based on expert knowledge that converts the human linguistic concepts into an automatic control strategy without any complicated mathematical model [10]. Simulation is performed in buck converter to verify the proposed fuzzy logic controllers.

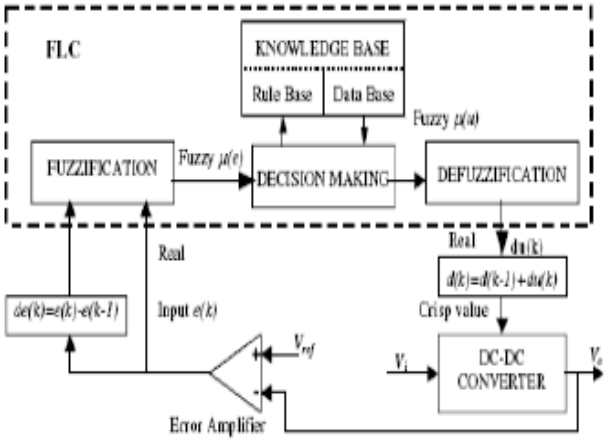

Fig5. Block diagram of the Fuzzy Logic Controller (FLC) for dc-dc converters.

A. Fuzzy Logic Membership Functions:

The dc-dc converter is a nonlinear function of the duty cycle because of the small signal model and its control method was applied to the control of boost converters. Fuzzy controllers do not require an exact mathematical model. Instead, they are designed based on general knowledge of the plant. Fuzzy controllers are designed to adapt to varying operating points. Fuzzy Logic Controller is designed to control the output of boost dc-dc converter using Mamdani style fuzzy inference system. Two input variables, error (e) and change of error (de) are used in this fuzzy logic system. The single output variable (u) is duty cycle of PWM output.

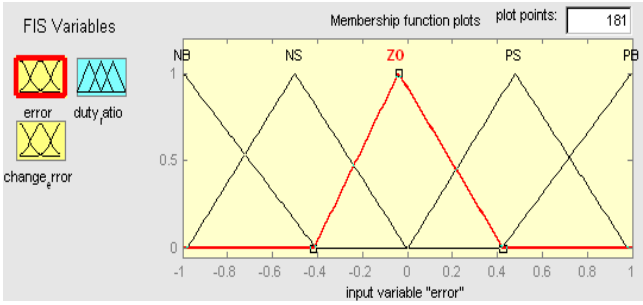

Fig6.The Membership Function plots of error

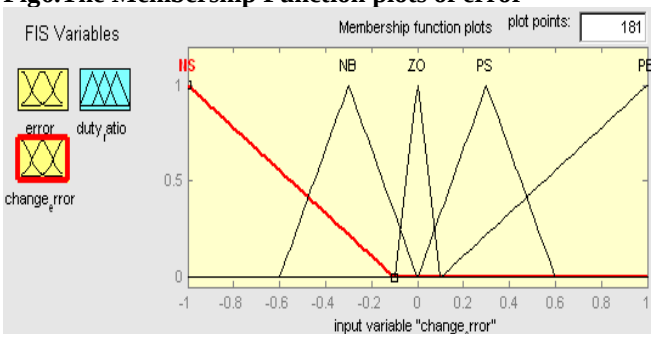

Fig7. The Membership Function plots of change error

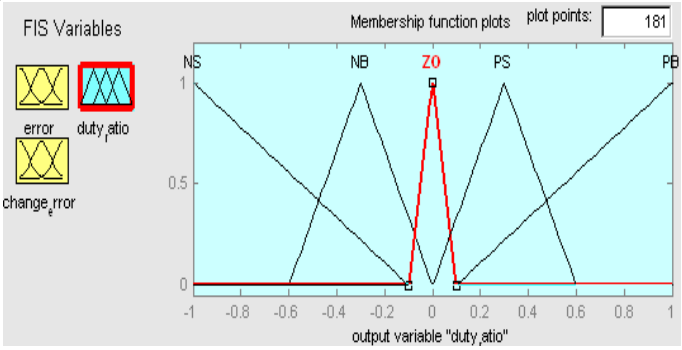

Fig.8. The Membership Function plots of duty ratio

B. Fuzzy Logic Rules:

The objective of this dissertation is to control the output voltage of the boost converter. The error and change of error of the output voltage will be the inputs of fuzzy logic controller. These 2 inputs are divided into five groups; NB: Negative Big, NS: Negative Small, ZO: Zero Area, PS: Positive small and PB: Positive Big and its parameter [10]. These fuzzy control rules for error and change of error can be referred in the table that is shown in Table II as per below:

Table II. Table rules for error and change of error

(de) \ (e)	NB	NS	ZO	PS	PB
NB	NB	NB	NB	NS	ZO
NS	NB	NB	NS	ZO	PS
ZO	NB	NS	ZO	PS	PB
PS	NS	ZO	PS	PB	PB
PB	ZO	PS	PB	PB	PB

IV. MATLAB/SIMULI RESULTS

Here simulation is carried out in several cases, in that 1). A High Performance of Single Phase Source Fed Non-Linear Load without APF, 2). A High Performance of Single Phase Source Fed Non-Linear Load with APF by using PI controller. 3). A High Performance of Single Phase Source Fed Non-Linear Load with APF by using fuzzy controller.

Case 1: A High Performance of Single Phase Source Fed Non-Linear Load without APF

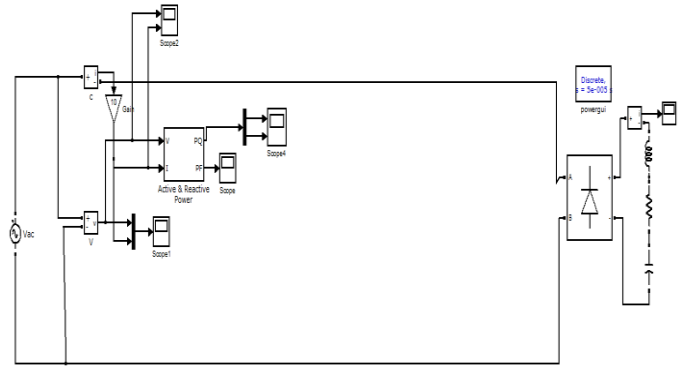

Fig4. Matlab/Simulink Model of Proposed Single Phase Source Fed Non-Linear Load without APF Topology.

Fig.4 shows the Matlab/Simulink Model of Proposed Single Phase Source Fed Non-Linear Load without APF Topology using Matlab/Simulink Platform.

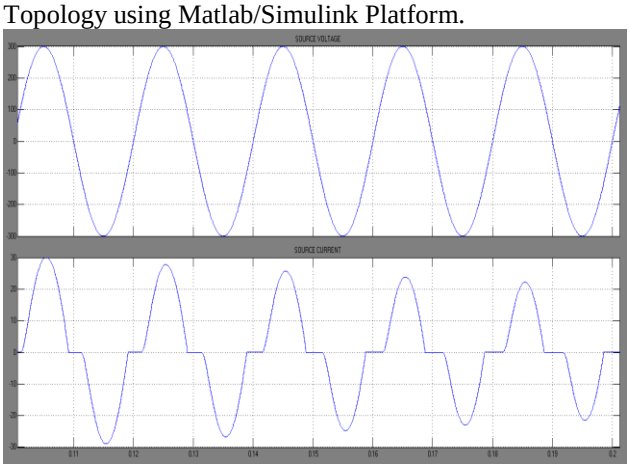

Fig5. Source Voltage & Current.

Fig.5 shows the Source Voltage & Current of Proposed Single Phase Source Fed Non-Linear Load without APF Topology.

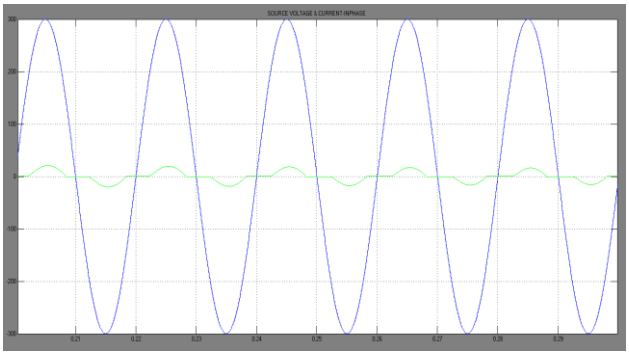

Fig.6 Source Voltage & Current in In-Phase Condition.

Fig.6 shows the Source Voltage & Current in In-Phase Condition of Proposed Single Phase Source Fed Non-Linear Load without APF Topology.

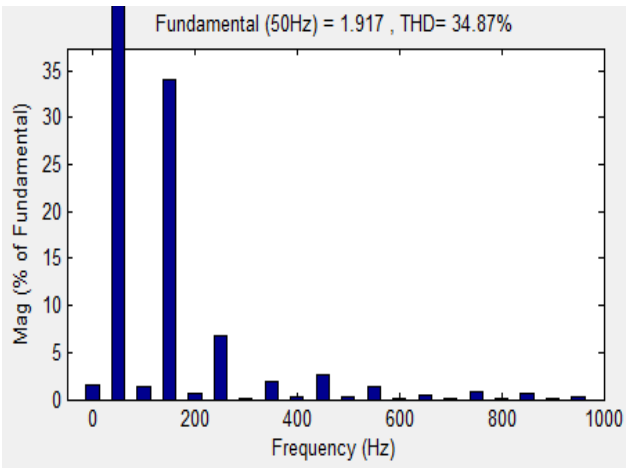

Fig.7 FFT Analysis of Source Current without APF.

Fig.7 shows the FFT Analysis of Source Current without APF, attain 34.87%.

Case 2: A High Performance of Single Phase Source Fed Non-Linear Load with APF by using PI controller

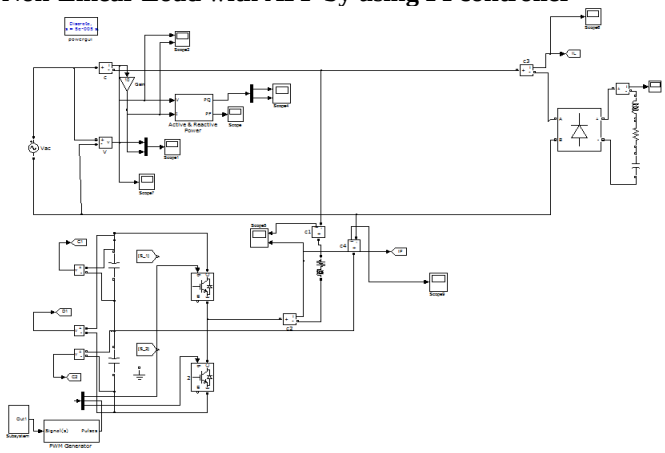

Fig8. Matlab/Simulink Model of Proposed Single Phase Source Fed Non-Linear Load with APF Topology.

Fig.8 shows the Matlab/Simulink Model of Proposed Single Phase Source Fed Non-Linear Load with APF Topology using Matlab/Simulink Platform.

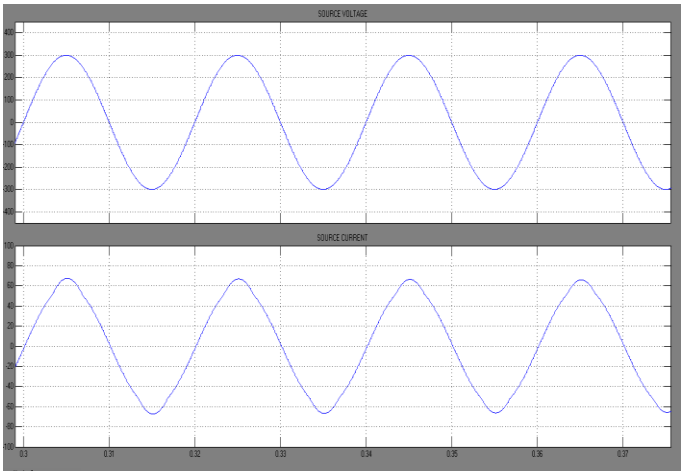

Fig.9 Source Voltage & Current.

Fig.9 shows the Source Voltage & Current of Proposed Single Phase Source Fed Non-Linear Load with APF Topology, attain pure sinusoidal currents at PCC level maintain good power quality standards.

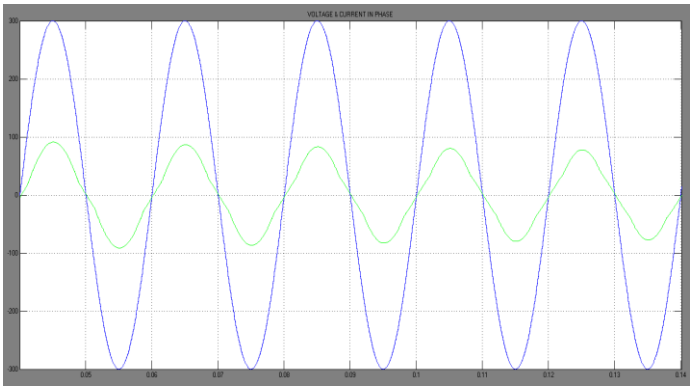

Fig10. Source Voltage & Current in In-Phase Condition.

Fig.10 shows the Source Voltage & Current in In-Phase Condition of Proposed Single Phase Source Fed Non-Linear Load with APF Topology by using PI controller.

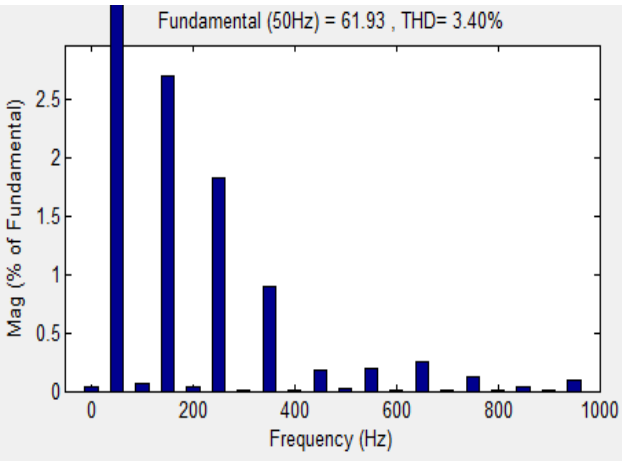

Fig11. FFT Analysis of Source Current with APF by using PI controller.

Fig.11 shows the FFT Analysis of Source Current with APF, attain 3.40%.

Case3: A High Performance of Single Phase Source Fed Non-Linear Load with APF by using fuzzy controller

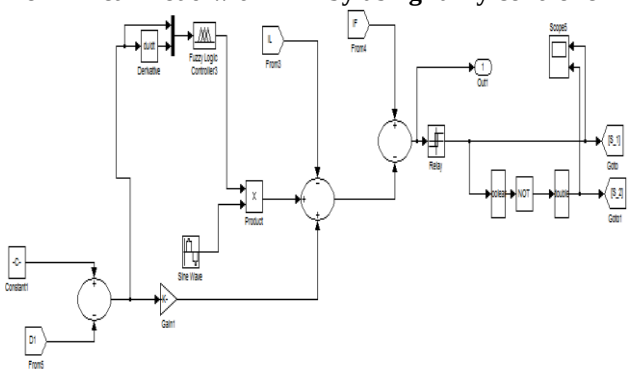

Fig.12. Matlab/Simulink Model of controller by using fuzzy controller.

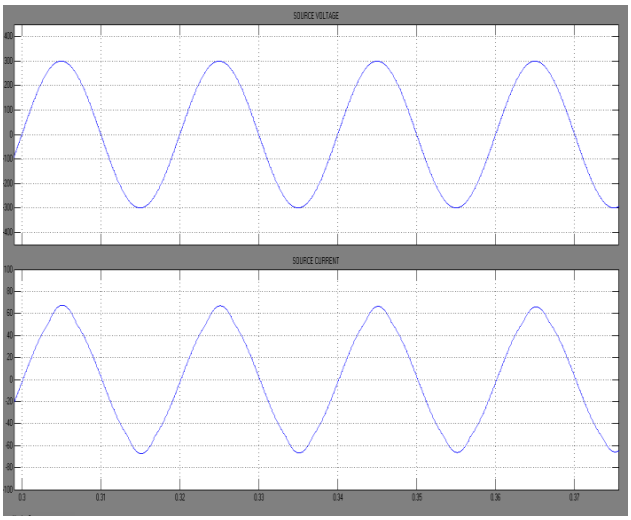

Fig.13. Source Voltage & Current.

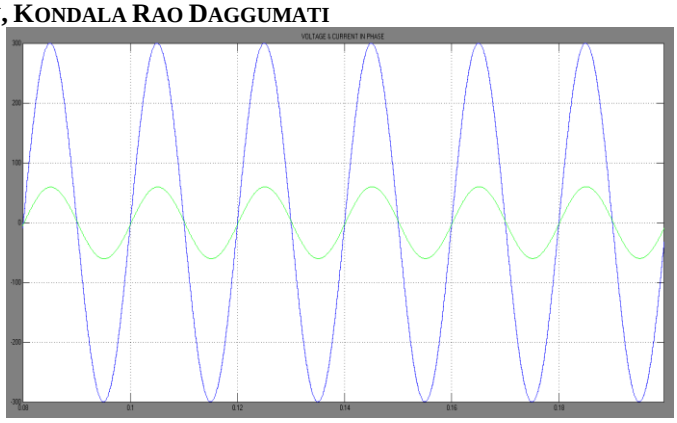

Fig14. Source Voltage & Current in In-Phase Condition.

Fig.14 shows the Source Voltage & Current in In-Phase Condition of Proposed Single Phase Source Three Phase with APF Topology by using fuzzy logic controller.

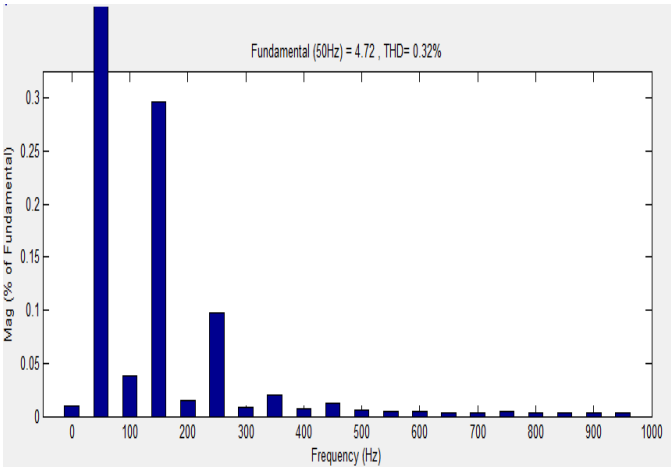

Fig15. FFT Analysis of Source Current with controller by using fuzzy controller.

Fig15 shows the FFT Analysis of Source Current with APF, attain 0.32%.

V.CONCLUSION

This proposed model is implemented using Matlab Simulink software and the obtained resultant waveforms were evaluated and the effectiveness of the system stability and performance of power system have been established. This harmonic injection in the neighbouring loads can create problems. APF in the form of a 3-leg VSI bridge with HCC strategy with half bridge topology has been modeled and controlled for harmonic reduction. Simulation analysis of the load currents with these nonlinear loads has been presented without / with APF. The solution suggested in the form of APF is better than a number of passive filters providing selective compensation. It is concluded that such a compensator can be effectively designed to meet the IEEE-519 standard for regulating the level of harmonics below 5% limit with non linear loads. It is worth noting that the half-bridge topology results in a switching loss which is half of what would be achieved in the widely used full-bridge topology. It is shown that the voltage imbalance existing in the series connected capacitors can be eliminated successfully.

VI. REFERENCES

[1] B. Singh, K. Al-Haddad, and A. Chandra, “A review of active filters for power quality improvement,” IEEE Transactions on Industrial Electronics, vol. 46, pp. 960-971, October 1999.

[2] Satyanarayana, G.; Ganesh, K.Lakshmi; Kumar, Ch. Narendra; Krishna, M.Vijaya, "A critical evaluation of power quality features using Hybrid Multi-Filter Conditioner topology," *Green Computing, Communication and Conservation of Energy (ICGCE), 2013 International Conference on* , vol., no., pp.731,736, 12-14 Dec. 2013.

[3] H. Akagi, “Active harmonic filters,” Proceedings of the IEEE, vol. 93, pp. 2128-2141, December 2005.

[4] H.L. Jou, J.C. Wu, and H.Y. Chu, “New single-phase active power filter,” IEE Proceedings on Electric Power Applications, vol. 141, pp. 129-134, May 1994.

[5] G.Satyanarayana., K.N.V Prasad, G.Ranjith Kumar, K. Lakshmi Ganesh, "Improvement of power quality by using hybrid fuzzy controlled based IPQC at various load conditions," Energy Efficient Technologies for Sustainability (ICEETS), 2013 International Conference on , vol., no., pp.1243,1250, 10-12 April 2013..

[6] J.C. Wu, and H.L. Jou, “Simplified control method for the single-phase active power filter,” IEE Proceedings on Electric Power Applications, vol. 143, pp. 219-224, May 1996.

[7] L. Zhou, and Z. Li, “A novel active power filter based on the least compensation current control method,” IEEE Transactions on Power Electronics, vol. 15, pp. 655-659, July 2000.

[8] M. Rukonuzzaman, and M. Nakaoka, ”Single-phase shunt active power filter with harmonic detection,” IEE Proceedings on Electric Power Applications, vol. 149, pp. 343-350, September 2002.

[9] K.N.V. Prasad, G.Ranjith Kumar, Y.S. Anil Kumar, G. Satyanarayana, "Realization of cascaded H-bridge 5-Level multilevel inverter as Dynamic Voltage Restorer," Computer Communication and Informatics (ICCCI), 2013 International Conference on , vol., no., pp.1,6, 4-6 Jan. 2013.

[10] R.C. Castello, R. Grino, and E. Fossas, “Odd-harmonic digital repetitive control of a single-phase current active filter,” IEEE Transactions on Power Electronics, vol. 19, pp. 1060-1068, July 2004.

[11] K.Lakshmi Ganesh, G. Satyanarayana, CH. Narendra Kumar, N. Srinivasa Rao “Power Quality Improvement by Using 7-Level Multi-string APF Interfacing to Distribution Generation Systems”, International Journal of Engineering Associates, Vol-1, Issue 3, p.p. 38-43, Feb, 2013.

[12] P. Kirawanich, and R.M. O’Connell, “Fuzzy logic control of an active power line conditioner,” IEEE Transactions on Power Electronics, vol. 19, pp. 1574-1585, November 2004.

[13] L.P. Kunjumuhammed, and M.K. Mishra, “A control for single-phase active power filter under non-stiff voltage source,” IEEE Transactions on Power Electronics, vol. 21, pp. 822-825, May 2006.

[14] G. Satya Narayana, Ch. Narendra Kumar, Ch. Rambabu “ A Comparative Analysis of PI Controller and Fuzzy Logic Controller for Hybrid Active Power Filter Using Dual Instantaneous Power Theory” International Journal of Engineering Research & Development, Vol-4, Issue-6, p.p. 29-39, Oct, 2012.

[15] J. Matas, L.G.D. Vicuna, J. Miret, J.M. Guerrero, and M. Castilla, “Feedback linearization of a single-phase active power filter via sliding mode control,” IEEE Transactions on Power Electronics, vol. 23, pp. 116-125, January 2008.